6.200 Final Exam

Fall 2023

Name:

Kerberos/Athena Username:

6 questions 3 hours

- Please **WAIT** until we tell you to begin.
- Write your name and kerberos **ONLY** on the front page.
- This exam is closed-book, but you may use two 8.5″ × 11″ sheets of handwritten notes (both sides) as a reference. These sheets must be **handwritten** directly on the page (not printed).
- You may **NOT** use any electronic devices (including computers, calculators, phones, etc.).
- If you have questions, please **come to us at the front** to ask them.
- Enter all answers in the boxes provided. Work on other pages with QR codes may be taken into account when assigning partial credit. **Please do not write on the QR codes.**
- If you finish the exam more than 10 minutes before the end time, please quietly bring your exam to us at the front of the room. If you finish within 10 minutes of the end time, please remain seated so as not to disturb those who are still finishing their exams.
- You may not discuss the details of the exam with anyone other than course staff until final exam grades have been assigned and released.

Worksheet (intentionally blank)

1 Short Circuits

1.1 Favorable Currents

Solve for v in the circuit below using any method you prefer.

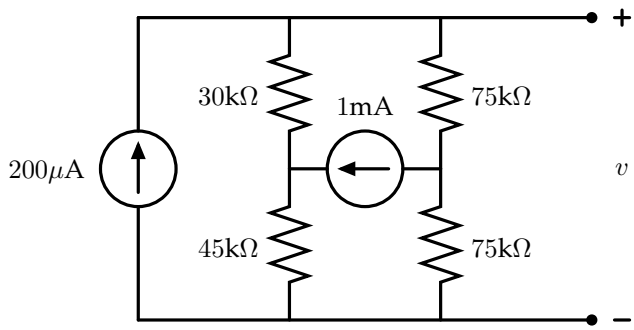

$v =$

1.2 Dependence Day

Solve for the voltage v below using any method you prefer, where $G = \frac{4}{1\Omega}$:

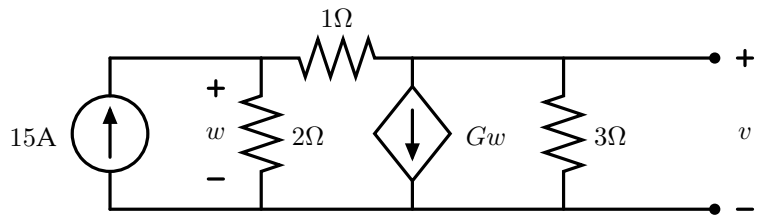

$v =$

1.3 Looping Back...

Consider the following circuit:

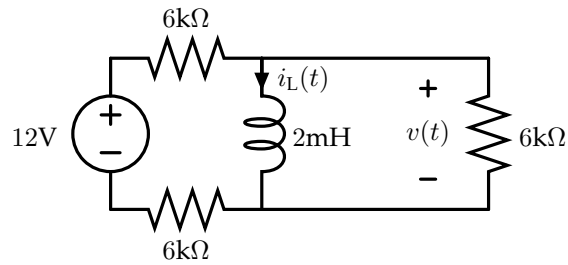

Assume that at time $t = 0^-$, the inductor is fully discharged, i.e., $i_L(t = 0^-) = 0$A.

On the axes below, sketch the values of $v(t)$ and $i_L(t)$ as functions of time on the axes below. In your sketches, label all key values/asymptotes (with units); and for any portions of the graph that trace out an exponential curve, indicate the associated time constant(s).

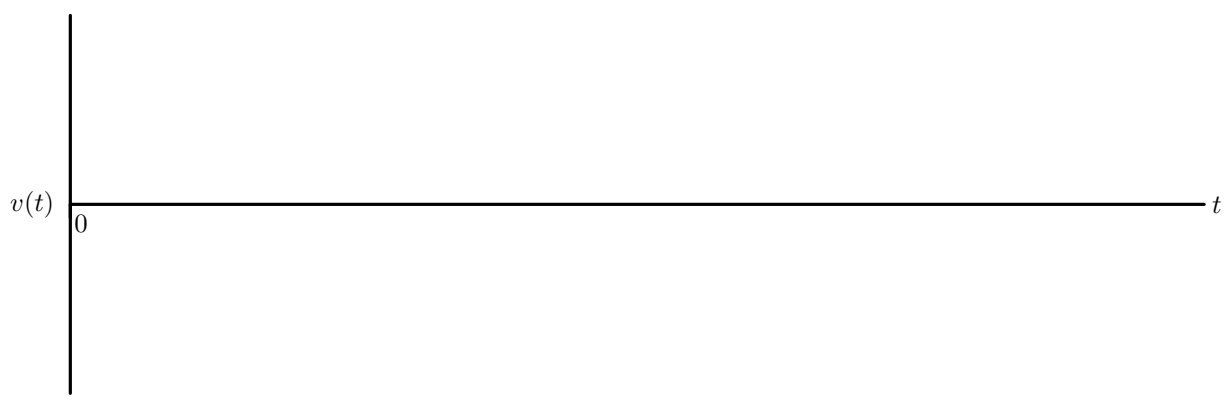

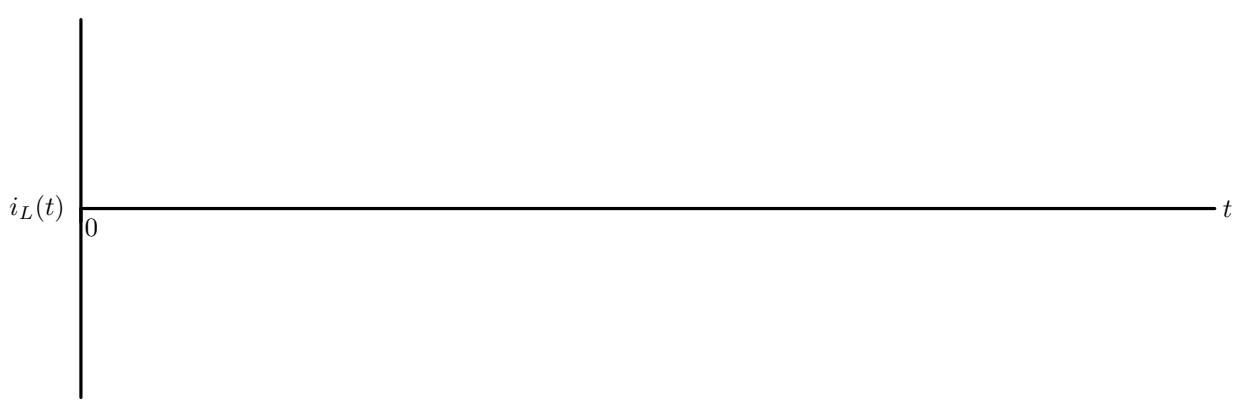

2 Motor Speeds

Kim, Pat, Jody, Chris, and Jamie are trying to design a controller for an animatronic display of three dancing robots using a 10V power supply and three motors. The first robot is supposed to spin as fast as possible (in one direction only), the second at half the speed of the first, and the third at half the speed of the second.

Each engineer has come up with a design, as shown below. Assume the motors can be modeled as resistors with a resistance of approximately 5Ω, and that the rotational speed of a motor is proportional to the voltage drop across it.

Let M_1 be the motor associated with robot 1, M_2 be the motor associated with robot 2, and M_3 be the motor associated with robot 3. Let v_1, v_2, and v_3 be the voltage drops across these motors, respectively.

For each design, indicate the voltage drop across each of the motors. Your answers for integer values should be exact, and your other answers should be accurate to within 0.1 Volts of the true value (you do not need to solve for the exact value).

(a) **Jody**

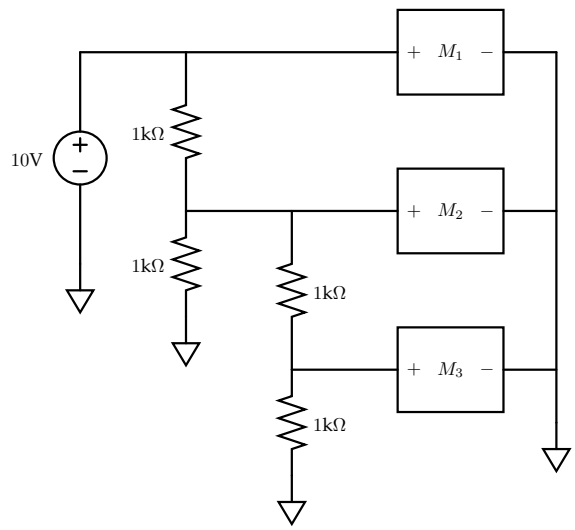

$v_1 \approx$ $v_2 \approx$ $v_3 \approx$

(b) **Chris**

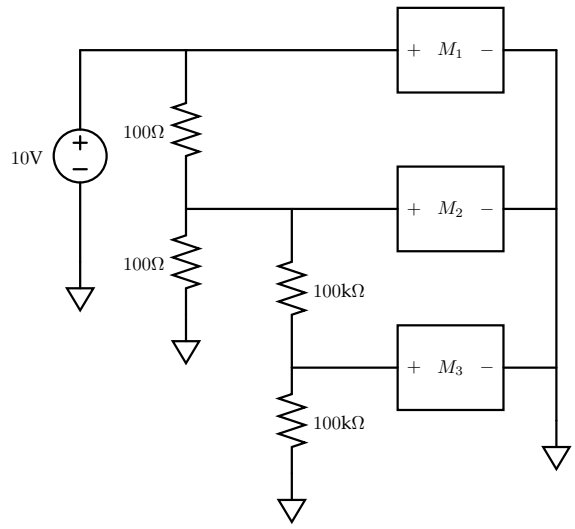

$v_1 \approx$ $v_2 \approx$ $v_3 \approx$

(c) **Pat**

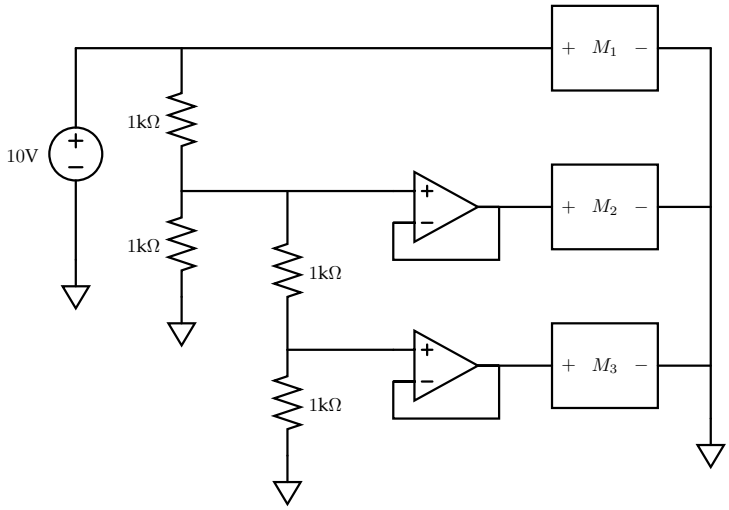

$v_1 \approx$ $v_2 \approx$ $v_3 \approx$

(d) **Kim**

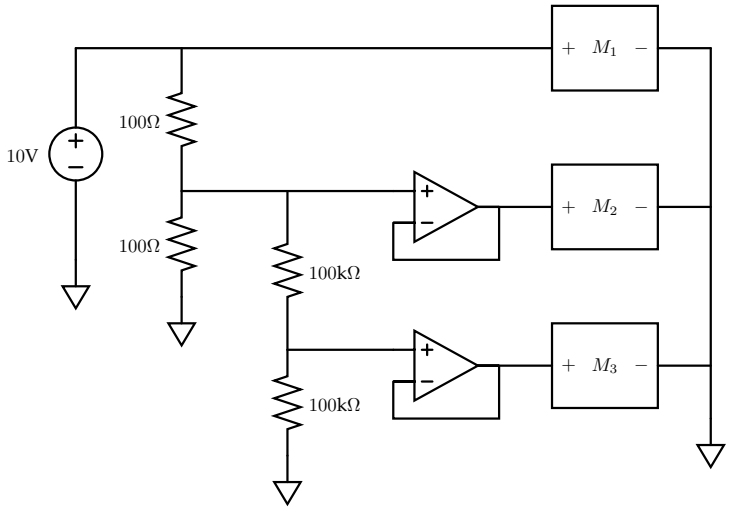

$v_1 \approx$ $v_2 \approx$ $v_3 \approx$

(e) **Jamie**

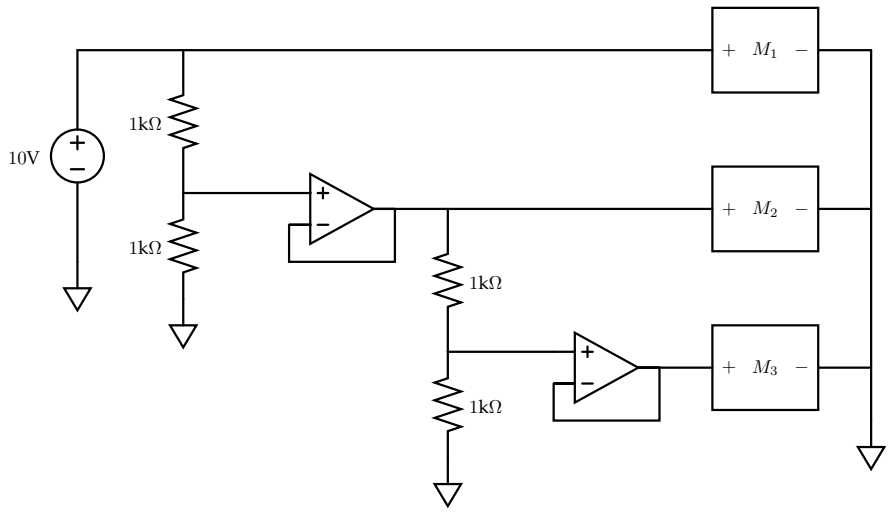

$v_1 \approx$ $v_2 \approx$ $v_3 \approx$

Worksheet (intentionally blank)

3 Last-minute Gift Shopping

In a daze preparing for finals, you realize you forgot to buy holiday gifts for friends and family. Not knowing what else to do (the COOP is closed), you decide to wrap up some 6.200 circuits. You build and wrap the following circuits, labeled **K1** through **K4**:

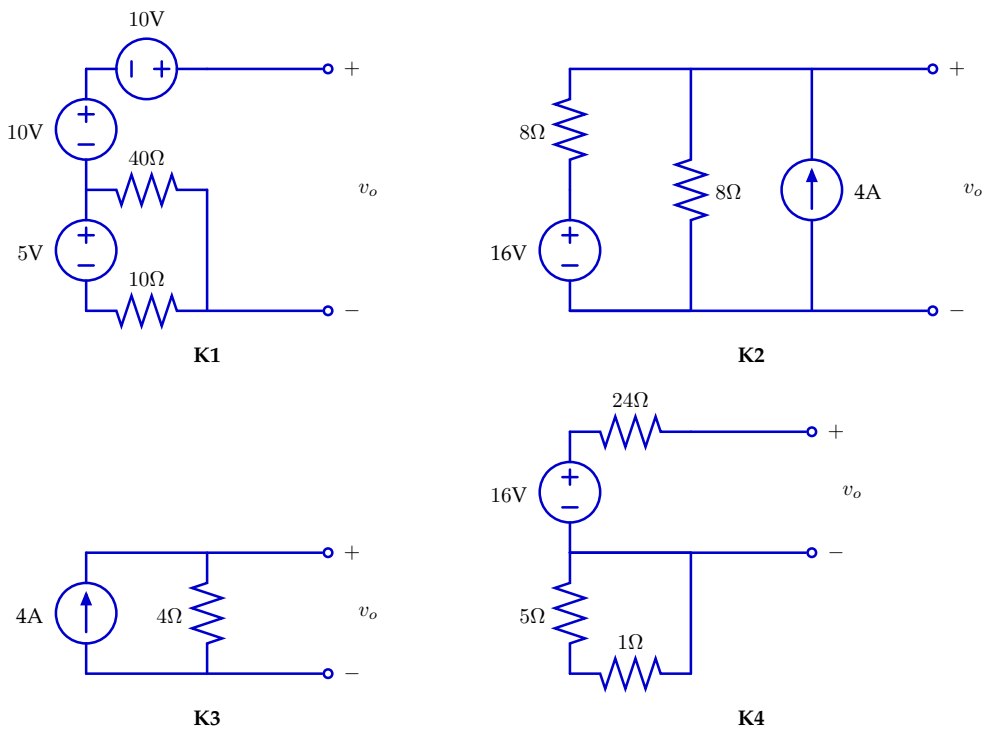

Unfortunately, you fall asleep before you can label each package. Luckily, though, the v_o port is still visible on each package (you're not very good at wrapping presents, I guess). You grab your voltmeter and measure v_o on each package, labeled **U1** through **U4** below:

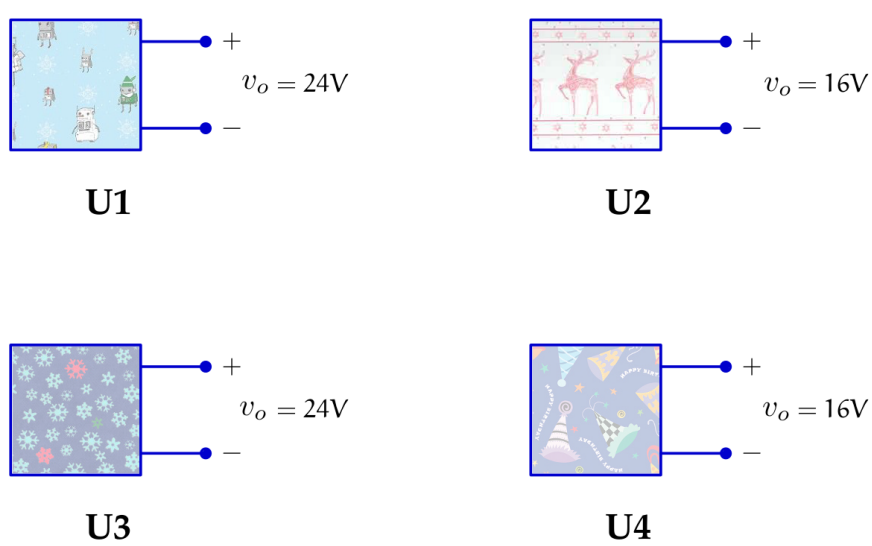

3.1 Single Measurements

Based on these measurements for v_o, which of the circuits (**K1**, **K2**, **K3**, and/or **K4**) could be in the the packages labeled **U1** and **U3**?

Enter one or more numbers:

Which of the circuits (**K1**, **K2**, **K3**, and/or **K4**) could be in the packages labeled **U2** and **U4**?

Enter one or more numbers:

3.2 Parallel

You are discouraged, thinking to yourself that, since two circuits measured 16V and two measured 24V, you will never be able to tell them apart with just a voltmeter.

However, just before you tear apart the packages, your roommate saves you from wasting that valuable wrapping paper by suggesting that you can figure out which circuit is which by connecting the different boxes together and measuring the output voltage of the combined circuit. You connect two circuits in parallel by wiring their positive terminals together, and wiring their negative terminals together. You then measure the voltage drop between these terminals.

You take the following measurements:

- When **U1** and **U2** are connected in parallel, the output voltage is 22V.
- When **U3** and **U4** are connected in parallel, the output voltage is 20V.

Which circuit is in each package? Enter a single number in each box:

U1: **U2**:

U3: **U4**:

4 Filter, Two Ways

Using the scopes in the lab, you measure the magnitude and phase of the frequency response of a circuit to be the following:

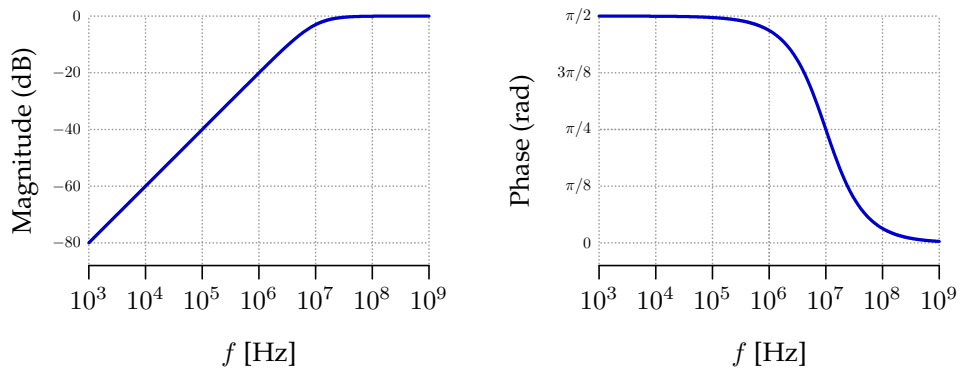

For that same circuit, when you drive it with a sinusoidal input at some frequency f_1, the input (solid) and output (dashed) waveforms are shown below, as a function of time:

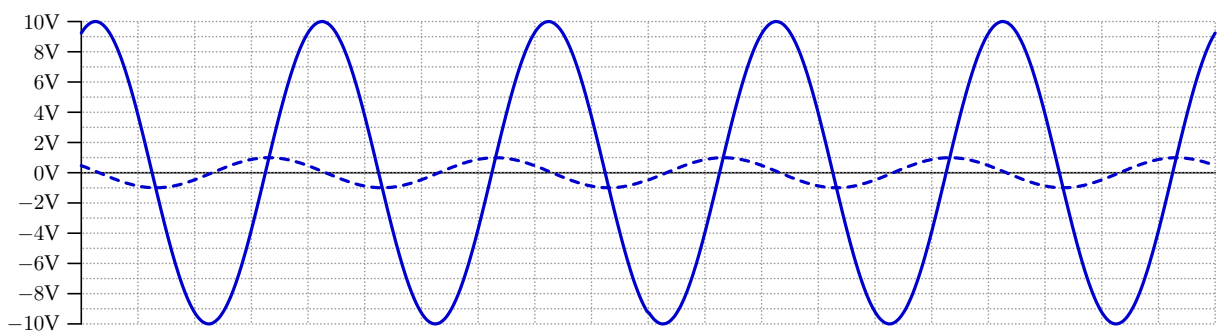

When you drive the circuit with a different frequency f_2, the input(solid) and output (dashed) waveforms instead look like:

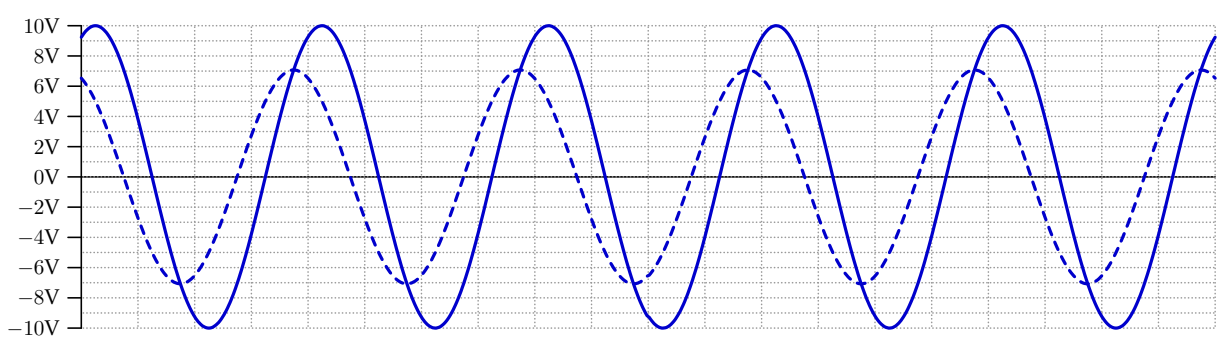

On the facing page, answer some questions about this circuit.

Question 1: Approximately what frequencies f_1 and f_2 correspond to those graphs?

$f_1 =$ $f_2 =$

Question 2: In the box below, complete a schematic drawing of a circuit that could be represented on the previous page. The indicated voltage source provides the input voltage. Clearly label all values in your schematic (including units), and clearly label the output voltage as well.

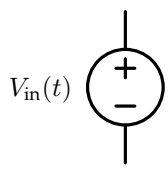

Question 3: Now suppose that the graphs on the previous page were identical but were measuring current (in Amps) instead of voltage. In the box below, complete a schematic drawing of a circuit that would be consistent with those graphs. The indicated current source below provides the input current. Clearly label all values in your schematic (including units), and clearly label the output current as well.

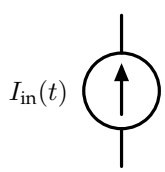

5 RLC

Consider the circuit below:

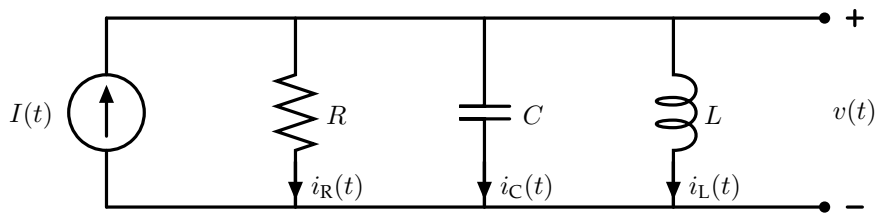

To start, consider the case where the current source has been on with value I_o for a long time and the system has reached the steady state. After this, at $t = 0$, the current source changes from I_o to I_1, where $I_o > I_1 > 0$, so that $I(t)$ follows the general shape shown below:

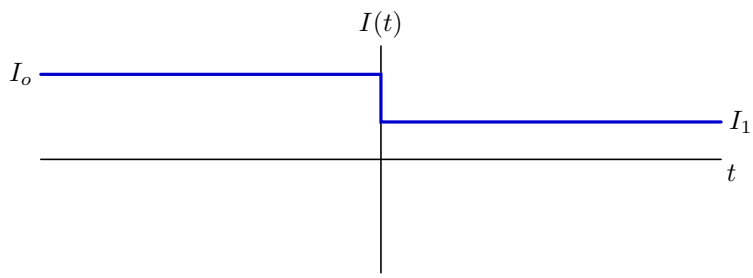

5.1 Part 1

Fill in the table below with the values of i_R, i_C, i_L, and v immediately before and after the step, as well as in the limit as $t \to \infty$. Express your answers in terms of R, L, C, I_o, and/or I_1.

	$t = 0_-$	$t = 0_+$	$t \to \infty$
$i_R(t)$			
$i_C(t)$			
$i_L(t)$			
$v(t)$			

5.2 Part 2

Now fill in this table with the first derivatives of the signals from the previous page, each evaluated at time $t = 0_+$. Express your answers in terms of R, L, C, I_o, and/or I_1.

Just after time $t = 0$, $\frac{d}{dt} i_{\mathrm{R}}(t) =$

Just after time $t = 0$, $\frac{d}{dt} i_{\mathrm{C}}(t) =$

Just after time $t = 0$, $\frac{d}{dt} i_{\mathrm{L}}(t) =$

Just after time $t = 0$, $\frac{d}{dt} v(t) =$

5.3 Part 3

Assuming $R > \sqrt{L/C}$, i.e., an underdamped system, determine which of the following graphs correctly describes the value of i_R, i_C, and i_L for $t > 0$. Indicate one graph for each current. The scales on the vertical axes are not necessarily consistent from plot to plot (nor with the graph of $I(t)$ from earlier in the problem), but in each graph you may assume that the axes cross at the origin.

Graph 1

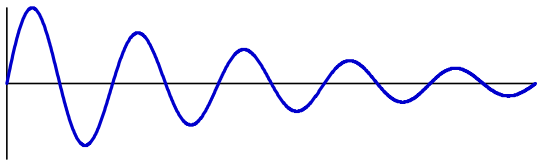

Graph 2

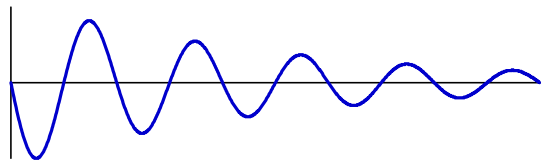

Graph 3

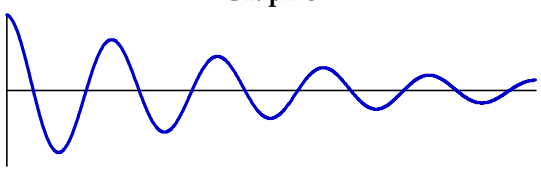

Graph 4

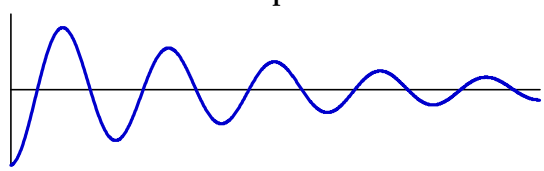

Graph 5

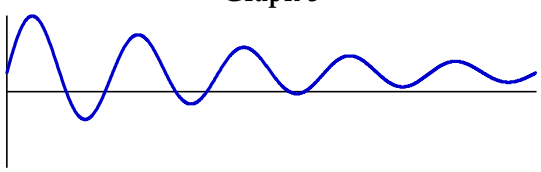

Graph 6

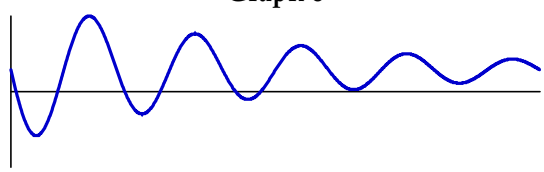

Graph 7

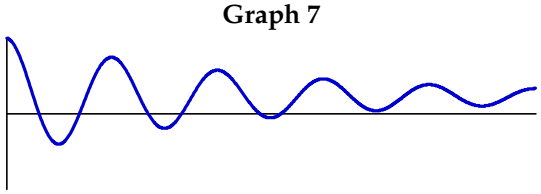

Graph 8

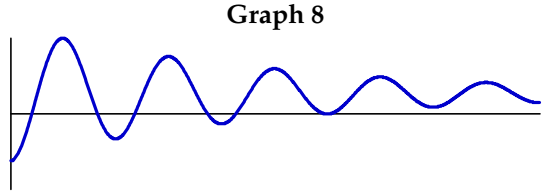

Which graph matches which current? Enter a single number for each:

$i_R(t)$: $i_C(t)$: $i_L(t)$:

Worksheet (intentionally blank)

6 Active Filters

The last sheet of this exam (page 27, which you may remove from this exam) contains several graphs of frequency response magnitudes.

For each of the circuits below, indicate which of thos graphs best represents the magnitude of the circuit's frequency response, and also indicate the limiting values of that magnitude (in decibels) as $\omega \to 0$ and $\omega \to \infty$. Write your answers in the boxes on the facing page.

Circuit 1

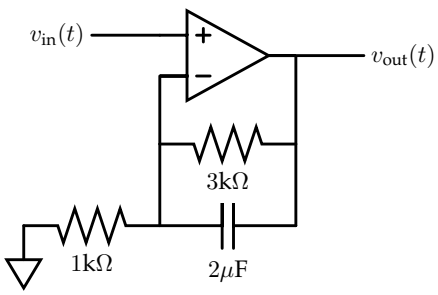

Circuit 2

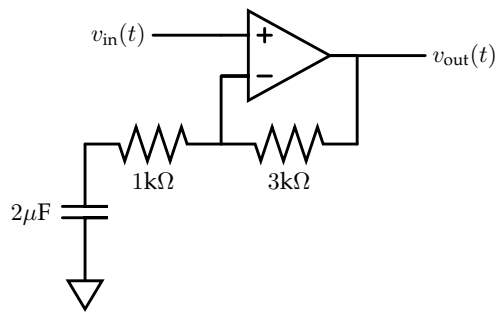

Circuit 3

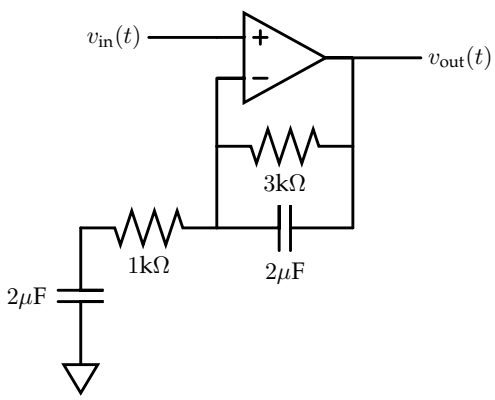

Circuit 4

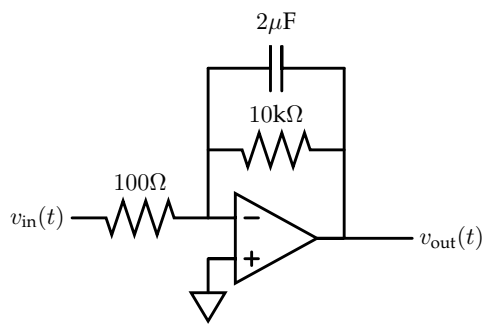

Circuit 5

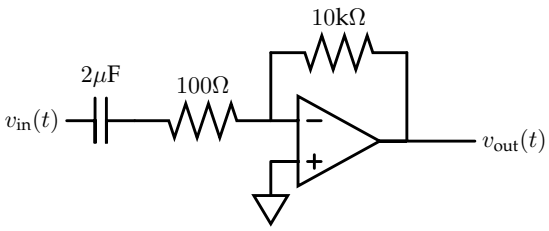

Circuit 6

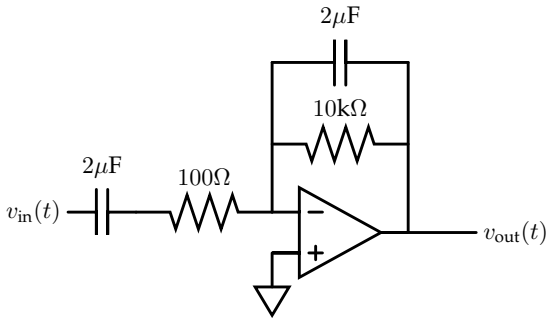

Circuit 1

Graph (A-H): Limit (dB) as $\omega \to 0$: Limit (dB) as $\omega \to \infty$:

Circuit 2

Graph (A-H): Limit (dB) as $\omega \to 0$: Limit (dB) as $\omega \to \infty$:

Circuit 3

Graph (A-H): Limit (dB) as $\omega \to 0$: Limit (dB) as $\omega \to \infty$:

Circuit 4

Graph (A-H): Limit (dB) as $\omega \to 0$: Limit (dB) as $\omega \to \infty$:

Circuit 5

Graph (A-H): Limit (dB) as $\omega \to 0$: Limit (dB) as $\omega \to \infty$:

Circuit 6

Graph (A-H): Limit (dB) as $\omega \to 0$: Limit (dB) as $\omega \to \infty$:

Worksheet (intentionally blank)

Worksheet (intentionally blank)

Worksheet (intentionally blank)

Worksheet (intentionally blank)

Worksheet (intentionally blank)

Graphs for Last Question

Graph A

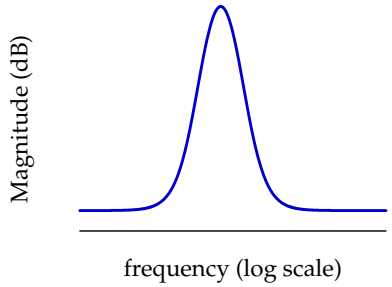

Graph B

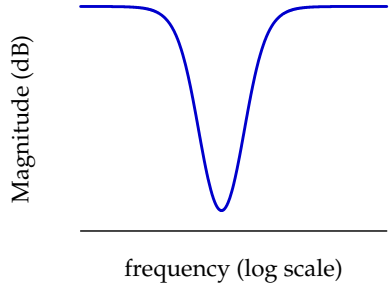

Graph C

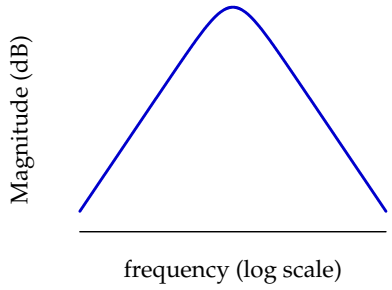

Graph D

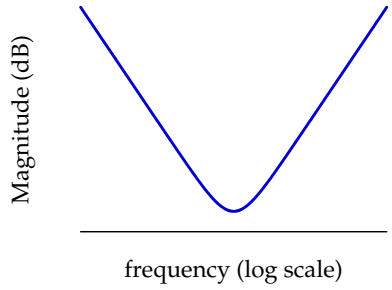

Graph E

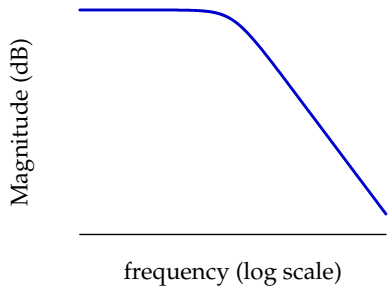

Graph F

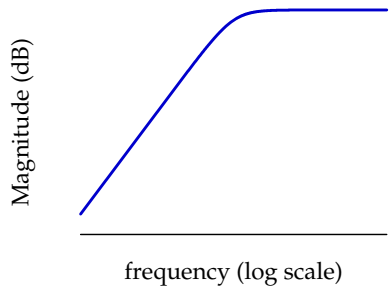

Graph G

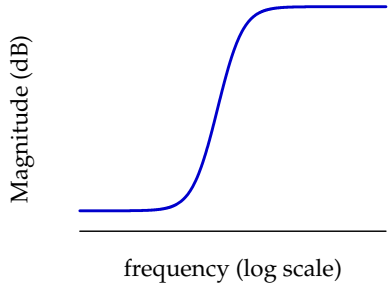

Graph H

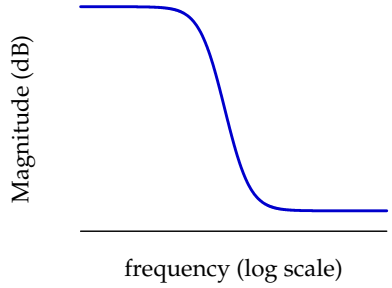

Worksheet (intentionally blank)